# 8475xxxCOM- Fireplace TV stand.

Finish: White, Walnut

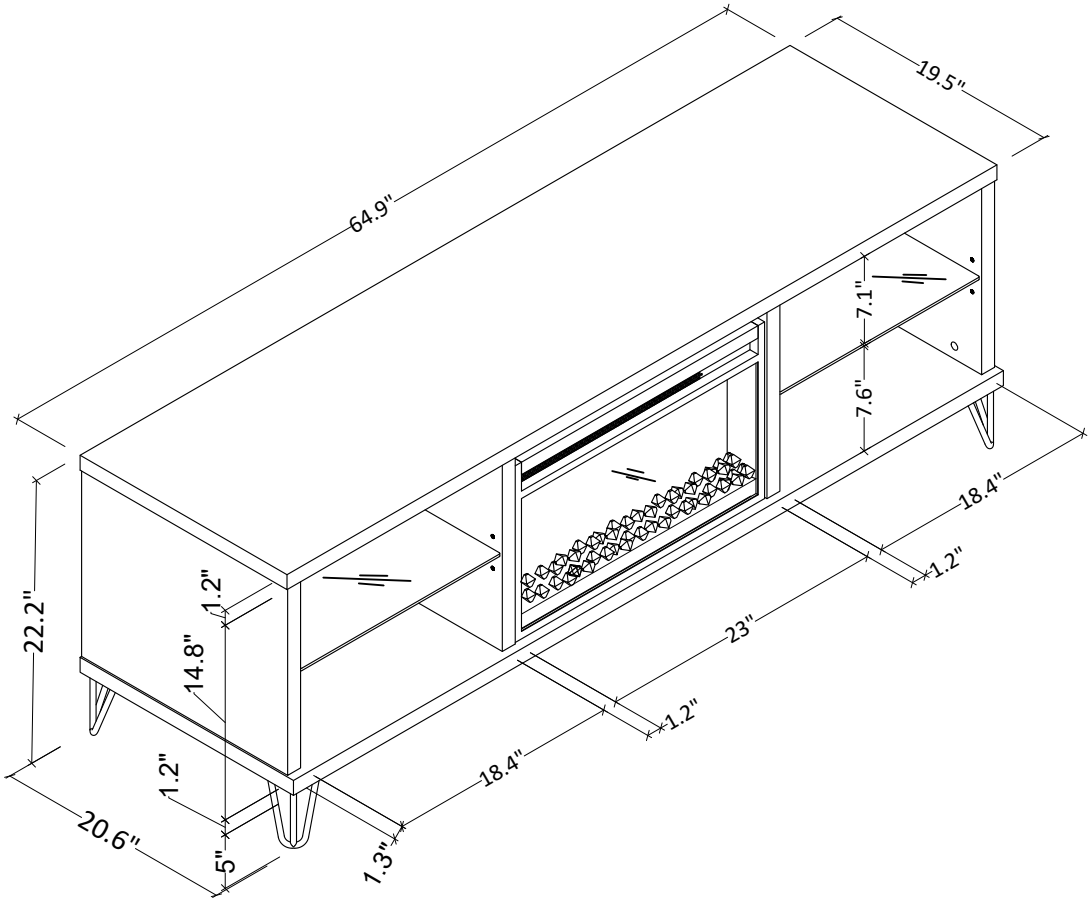


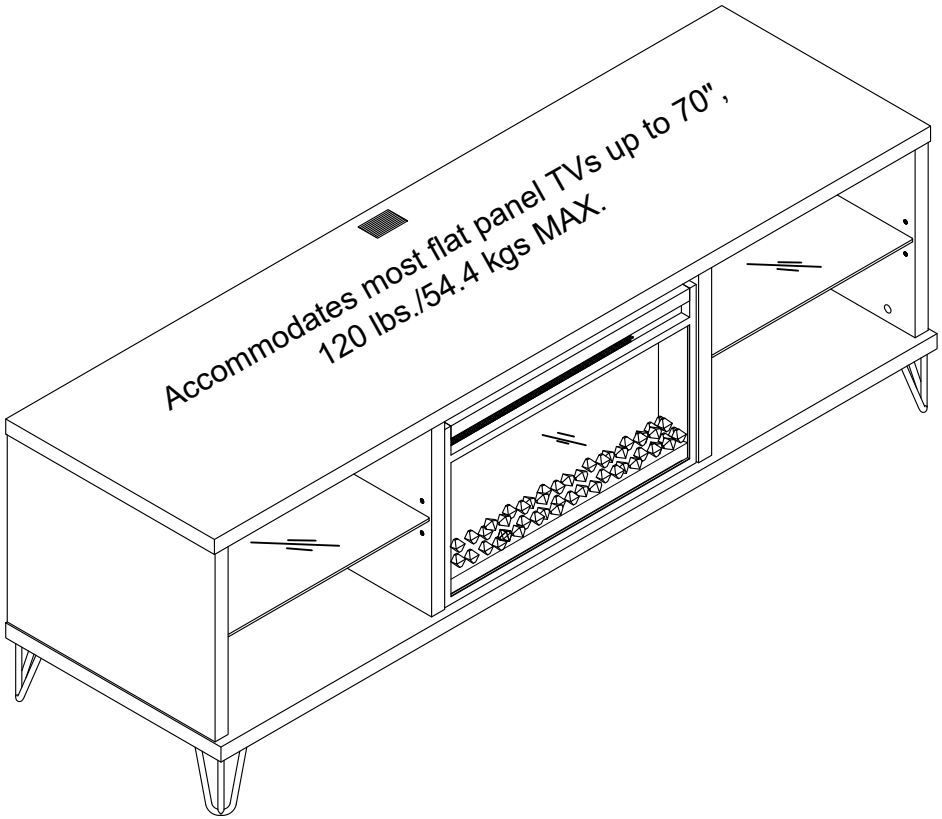


Wood breakdown: 95%
Total storage: 17.1 cubit feet

Overall Product Size:
64.9"W x 20.6"D x 22.2"H
164.7cm W x 52.2cm D x 56.4cm H

Maximum Weight Capacities
Unit Weight: 93.3 lbs. (42.32 Kgs)